CPM208 **TABLE MOUNTABLE MODULAR A/V CONNECTOR BAY**

PRODUCT DIMENSIONIS

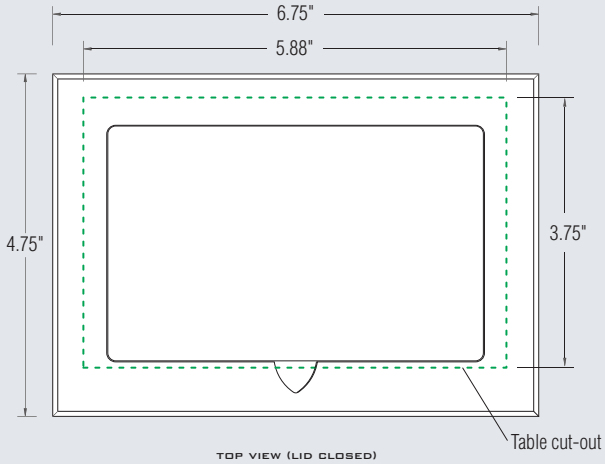

TOP VIEW (LID CLOSED)

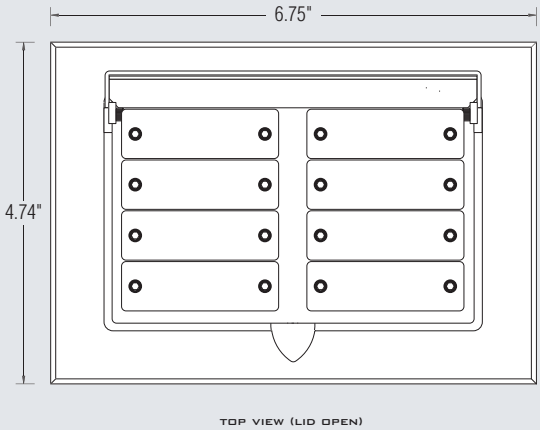

TOP VIEW (LID OPEN)

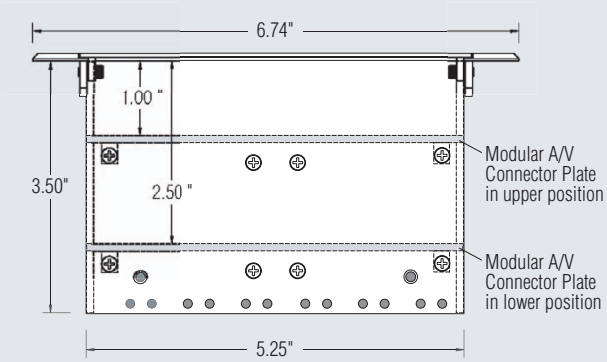

SIDE VIEW

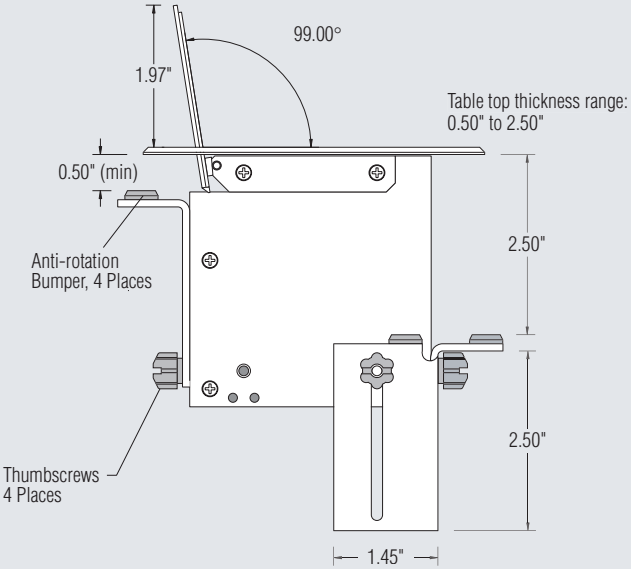

SIDE VIEW (LID OPEN)